©2010 B&B Electronics. All rights reserved

B&B ELECTRONICS

PRODUCT INFORMATION

FOSTCDR

Industrial Serial to Multimode Fiber Optic Converter

- ✓ **Data Rates up to 115.2 kbps**
- ✓ **2.5 Mile (4 km) Range**
- ✓ **10 to 30 VDC Input Voltage**
- ✓ **Wide Operating Temperature**
- ✓ **2000V Isolation**
- ✓ **MODBUS ASCII/RTU Compatible**
- ✓ **EMI/RFI Protection**

The FOSTCDR is our Industrial Serial to Multimode Fiber Optic Converter. Designed for industry, it extends serial data range up to 2.5 miles and provides the most versatile connection possible between any asynchronous full or half-duplex serial equipment. In addition to direct point-to-point connectivity, it is capable operating in a multi-drop mode. This allows one serial device to communicate with up to 31 others around a fiber optic ring. Since it supports mixed serial standards, you can replace other converters and isolators and add the EMI/RFI immunity inherent to fiber optic communications.

In RS-232 mode, the FOSTCDR supports transmit and receive data. Handshaking signals are not passed through.

An Automatic Send Data Control circuit controls the RS-422/485 driver chip, eliminating the requirement for special software.

Easy to install and configure, it has an 8 position DIP Switch to set up the RS-422/485 parameters and terminal blocks to connect serial signals and power.

Specifications

Serial Technology	
RS-232	TD, RD, GND
RS-485 2-Wire	Data A(-), Data B(+), GND
RS-422/485 4-Wire	TDA(-), TDB(+), RDA(-), RDB(+), GND
Serial Connector	Terminal Block (24 to14 AWG)
Data Rate RS-232 RS-422/485	 Up to 115.2 Kbps Up to Up to 460.8 Kbps
Isolation	2KV RMS, 1 minute
Industrial Bus	MODBUS ASCII/RTU
Fiber Optic Technology	
Type / Wavelength	Multi-mode / 820 nm
Output Power	(-) 17 to (-) 10 dBm
Receive Sensitivity	(-) 25.4 dBm to (-) 24 dBm
Cable	62.5/125 micro-meter
Connector	ST
Data Rate	9.6 TO 115.2 kbps
Maximum Distance	2.5 miles (4 km)
Idle State	Transmitter Light ON
Power	
Source	External
Input Voltage	10 to 30 VDC
Power Consumption	4.2 Watts
Connector	Terminal Block (24 to 14 AWG)
Mechanical	
LED Indicators	Serial TD, RD, and Power
Dimensions	4.3 x 2.3 x .95 in (11 x 9 x 2.5 cm)
Enclosure	35mm DIN Mount, Plastic
Weight	0.4 lbs (182 g)
Environmental	
Op Temperature	- 40 to 176°F (- 40 to 80°C)
Storage Temp	- 40 to 185°F (- 40 to 85°C)
Op Humidity	0 to 95% Non-condensing
Regulatory	
Approvals	FCC, CE, cULus Recognized, File E222870
MTBF	460854 hours
MTBF Calc. Method	MIL 217F Parts Count Reliability Prediction

Ordering Information

FOSTCDR	Serial to Multimode Fiber Optic Converter
Accessories	
MDR-40-12	Industrial Slim-line Power Supply

B&B ELECTRONICS

www.bb-elec.com orders@bb-elec.com support@bb-elec.com

International Office: 707 Dayton Road PO Box 1040 Ottawa, IL 61350 USA 815-433-5100 Fax 433-5104

European Office: Westlink Commercial Park Oranmore Co. Galway Ireland +353 91 792444 Fax +353 91 792445

©2010 B&B Electronics. All rights reserved

B&B ELECTRONICS

PRODUCT INFORMATION

UL Installation Guidance

Underwriters Laboratories Conditions of Acceptability – When installed in the end-use equipment, consideration should be given to the following:
1. The wiring terminals are suitable for factory wiring only.
2. This device is to be mounted in a suitable enclosure in the end-product.
3. This device is suitable for operation at a maximum surrounding air temperature as described in the documentation.
4. These devices are intended for use in a pollution degree 2 environment.

- Input Voltage: 10 – 30 VDC
- Input Power 4.2 Watts
- Wire Range: 12 – 24 AWG
- Tightening Torque: 4 kgf-cm
- Temperature rating of filed installed conductors is 105 C minimum, sized for 60 C ampacity.
- Use copper wire only
- Maximum surrounding ambient air temperature 80 C

Front Panel

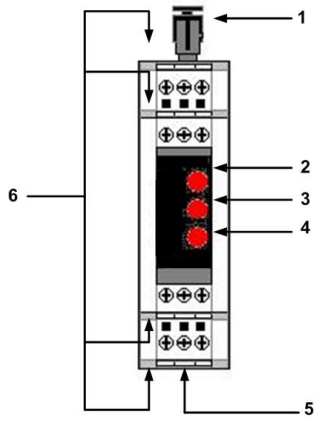

1	Fiber Connectors	Multi-mode, ST Connectors
2	PWR LED	ON When Power Applied
3	TD LED	On When Serial Data Transmitted
4	RD LED	On When Serial Data Received
5	DIP Switch	8 Position
6	Terminal Blocks	Serial Data and Power

Terminal Block

Terminal	Signal
A	RS-232 RD (OUTPUT)
B	GND
C	GND
D	RS-232 TD (INPUT)
E	NOT CONNECTED
F	+10 TO 30 VDC
G	RS-422/485 TDA(-) / DATA A(-)
H	RS-422/485 TDB(+) / DATA B (+)
J	+10 TO 30 VDC
K	RS-422/485 RDA(-) / DATA A (-)
L	RS-422/485 RDB(+) / DATA B (+)

DIP Switch (SW1)

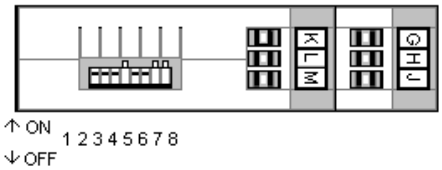

Pos	ON	OFF
1	RS-422/485 Baud Rate Selection	
2	RS-422/485 Baud Rate Selection	
3	RS-422/485 Baud Rate Selection	
4	RS-422/485 Baud Rate Selection	
5	RS-422/485 Baud Rate Selection	
6	FO Multi-drop Ring	FO Point-to-Point
7	RS-422/485 Mode Selection	
8	RS-422/485 Mode Selection	

Baud	1	2	3	4	5	R9	TIME OUT
1200	ON	OFF	OFF	OFF	OFF	820 kΩ	8.20 ms
2400	ON	OFF	OFF	OFF	OFF	430 kΩ	4.30 ms
4800	OFF	OFF	OFF	OFF	ON	None	2.20 ms
9600	OFF	OFF	OFF	ON	OFF	None	1.30 ms
19.2K	OFF	OFF	ON	OFF	OFF	None	0.56 ms
38.4K	OFF	ON	OFF	OFF	OFF	None	0.27 ms
57.6K	ON	OFF	OFF	OFF	OFF	None	0.22 ms
76.8K	ON	OFF	ON	ON	OFF	None	0.14 ms
115.2 K	ON	ON	ON	OFF	OFF	None	0.10 ms
153.6K	ON	OFF	OFF	OFF	OFF	6.2 kΩ	0.06 ms
230.4K	ON	OFF	OFF	OFF	OFF	4.3 kΩ	0.04 ms
460.8K	OFF	OFF	OFF	OFF	OFF	2.2 kΩ	0.02 ms

The Dip-Switch defines the mode of operation when being used for RS-422 or RS-485. Positions 1 through 5 determine the timeout of the RS-485 driver. Because the driver is controlled by hardware, a specific time must be set to tell the hardware how long to wait for data on the fiber side before turning off the RS-422/485 driver. If this time is set too short, the driver could be disabled before transmission is complete, resulting in data corruption. If the time is set too long, the device may respond before the RS-422/485 driver in the FOSTCDR is disabled, corrupting this response. Set the timeout for approximately one character time or longer. The character times for several different baud rates are selectable on switch positions 1 through 5. If you need a different timeout than what is provided, R10 can be removed and replaced with a different value R9. This table shows different timeout values for the switch positions as well as R9 replacement values.

B&B ELECTRONICS
www.bb-elec.com orders@bb-elec.com support@bb-elec.com
International Office: 707 Dayton Road PO Box 1040 Ottawa, IL 61350 USA 815-433-5100 Fax 433-5104
European Office: Westlink Commercial Park Oranmore Co. Galway Ireland +353 91 792444 Fax +353 91 792445

©2010 B&B Electronics. All rights reserved

B&B ELECTRONICS

PRODUCT INFORMATION

RS-422/RS-485 Mode Selection

1. RS-422/485 mode is selected by positioning DIP Switch positions 7 and 8 as shown below.

Mode	Position 7	Position 8
RS-485 2-Wire	ON	ON
RS-485 4-Wire	ON	OFF
RS-422	OFF	OFF

RS-485 2-Wire

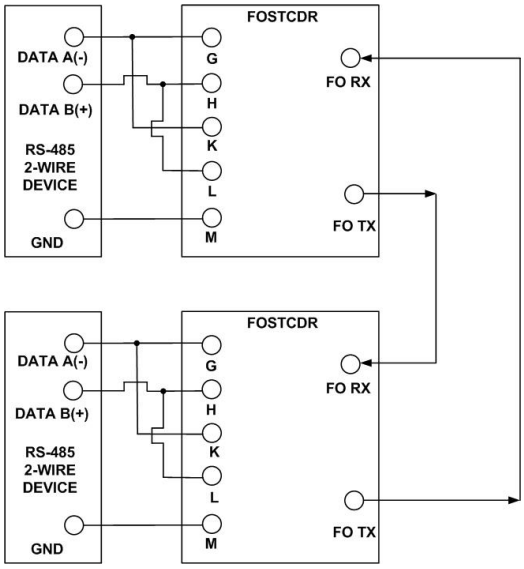

1. Loosen the screws to open the Serial TB Lead Clamps for the G, K, L, and M terminals.
2. Jumper terminal G to terminal K and connect to RS-485 Data A (-
lead.
3. Jumper terminal H to terminal L and connect to RS-485 Data B (+
lead.
4. Connect the signal ground lead to terminal M.
5. Tighten the screws to close the Serial TB Lead Clamps. Ensure tl
clamps hold the leads securely. However, do not over tighten.
6. Position DIP Switch positions 1 through 5 for t he desired baud ra
7. Position DIP Switch positions 7 and 8 to ON for RS-485 2-Wire mode.

Installation Notes:

Not all RS-485 devices are marked correctly for Data (+) and (-), so if the slave devices don't respond after going through the fiber converter, try swapping the wire pairs polarity to each converter. When there is no light received from the fiber in, the receive indicator will be On. You can interconnect or loop back the transmit fiber on one unit to the receive input on the same unit to verity the receive light goes out. If the transmit light is lighted all the time without data, the polarity of the RS-485 is reversed, or there is not enough bias, or termination loads on the RS-485 bus. Normal bias before termination is about 3.8 to 4.0 VDC, Data (+) to (-). See our RS-422/485 Application note for more information on biasing.

RS-422 / RS-485 4-Wire

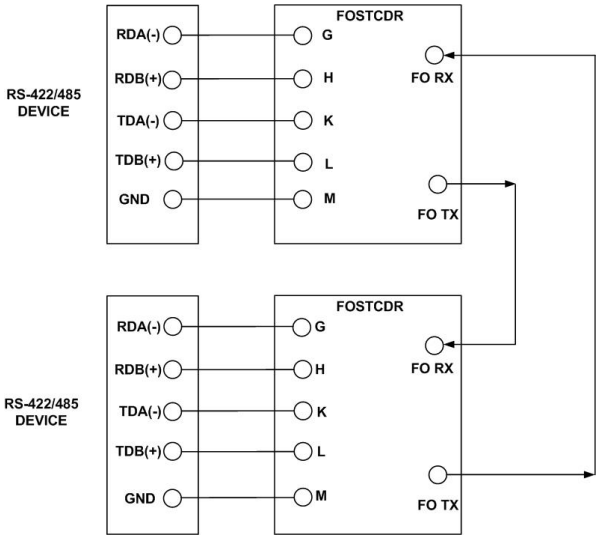

1. Loosen the screws to open the Serial TB Lead Clamps for the G, H, K, L, and M terminals.
2. Connect RS-422/485 signal leads as shown in the diagram.
3. Connect the signal ground lead to terminal M.
4. Tighten the screws to close the Serial TB Lead Clamps. Ensure the clamps hold the leads securely. However, do not over tighten.
5. Position DIP Switch positions 1 through 5 for t he desired baud rate.
6. Position DIP Switch positions 7 to ON and 4 to OFF for RS-485 4-Wire mode. Set DIP Switch positions 7 and 8 to OFF for RS-422 mode.

Installation Notes:

Not all RS-485 devices are marked correctly for Data (+) and (-), so if the slave devices don't respond after going through the fiber converter, try swapping the wire pairs polarity to each converter. When there is no light received from the fiber in, the receive indicator will be On. You can interconnect or loop back the transmit fiber on one unit to the receive input on the same unit to verity the receive light goes out. If the transmit light is lighted all the time without data, the polarity of the RS-485 is reversed, or there is not enough bias, or termination loads on the RS-485 bus. Normal bias before termination is about 3.8 to 4.0 VDC, Data (+) to (-). See our RS-422/485 Application note for more information on biasing.

B&B ELECTRONICS
www.bb-elec.com orders@bb-elec.com support@bb-elec.com
International Office: 707 Dayton Road PO Box 1040 Ottawa, IL 61350 USA 815-433-5100 Fax 433-5104
European Office: Westlink Commercial Park Oranmore Co. Galway Ireland +353 91 792444 Fax +353 91 792445

©2010 B&B Electronics. All rights reserved

RS-232

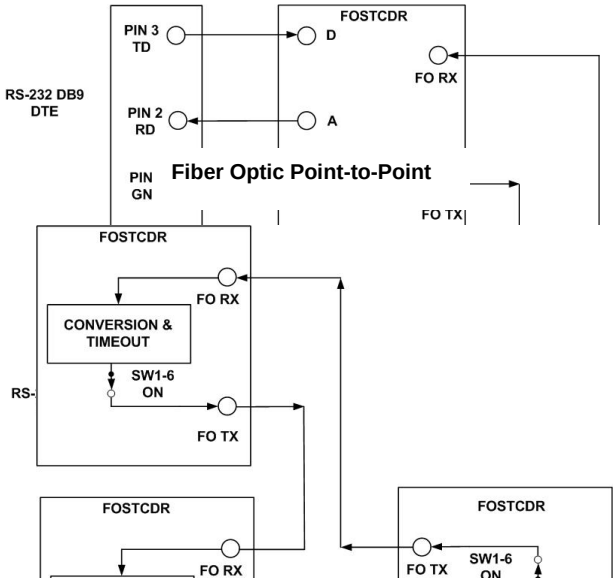

1. Loosen the screws to open the Serial TB Lead Clamps for the D, A, and B terminals.
2. Insert the RS-232 Signal Leads into the TB. Refer to the diagram above for DTE and DCE wiring configurations.
3. Tighten the screws to close the Serial TB Lead Clamps. Ensure the clamps hold the leads securely. However, do not over tighten.

Installation Notes:

- **DIP Switch Positions 1 through 5, 7 and 8 are not used in RS-232 Mode. Set switch 6 to OFF.**
- **The wiring example shows a DTE device on one end and a DCE device on the other.**
- **Handshaking signals are not passed through.**

Fiber Optic

1. Ensure your fiber optic cable is terminated with an ST type connector. 62.5/125 micro-meter multimode cable is recommended.
2. Connect the converter's transmitter to the distant end receiver and vice-versa.
3. The fiber optic transmitter light is ON in the idle state. Therefore, the RX indicator will be lighted when data is not being transferred.
4. DIP Switch SW1-6 is used to select point-to-point or multi-drop mode. For point-to-point, set the switch to OFF for both converters. For multi-drop, set the switch to ON for each converter in the ring. With SW1-6 in the ON position, receive data will be looped back to the fiber optic transmitter. Data will repeat around the ring until it finally reaches its source. When the data is received by the originator, timeout circuitry will prevent it from being re-transmitted.

Maximum Converters in a Fiber Ring		
Baud Rate	RS-232	RS-422/485
19.2 kbps and lower	32	32
38.4 kbps	16	24
115.2 kbps	2	8

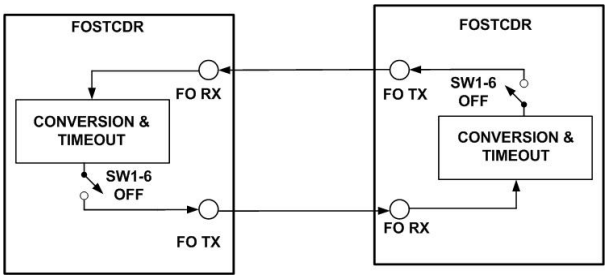

Fiber Optic Multi-drop Ring

RS-232 Loopback Test

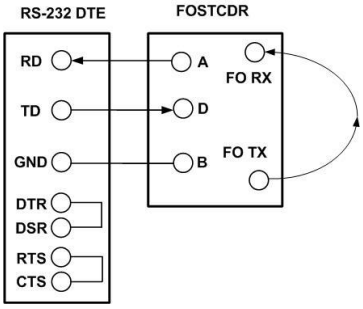

1. Configure the converter for RS-232.
2. Set DIP Switch SW1-6 to OFF.
3. Cross-connect the fiber optic transmitter to the fiber optic receiver using a multimode patch cord.
4. Connect a PC to the serial port.
5. Using Hyper Terminal or similar program, connect to the appropriate COM port. Set the baud rate to match the converter. Ensure Hyper Terminal local echo is OFF.
6. Transmit data. If the same character string is returned, the test is good.

Power

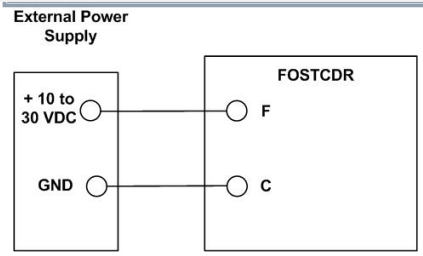

An external 10 to 30 VDC power supply is required. Attach power leads as shown above. Power use is 4.2 Watts.

B&B ELECTRONICS
www.bb-elec.com orders@bb-elec.com support@bb-elec.com
International Office: 707 Dayton Road PO Box 1040 Ottawa, IL 61350 USA 815-433-5100 Fax 433-5104
European Office: Westlink Commercial Park Oranmore Co. Galway Ireland +353 91 792444 Fax +353 91 792445

©2010 B&B Electronics. All rights reserved

B&B ELECTRONICS

PRODUCT INFORMATION
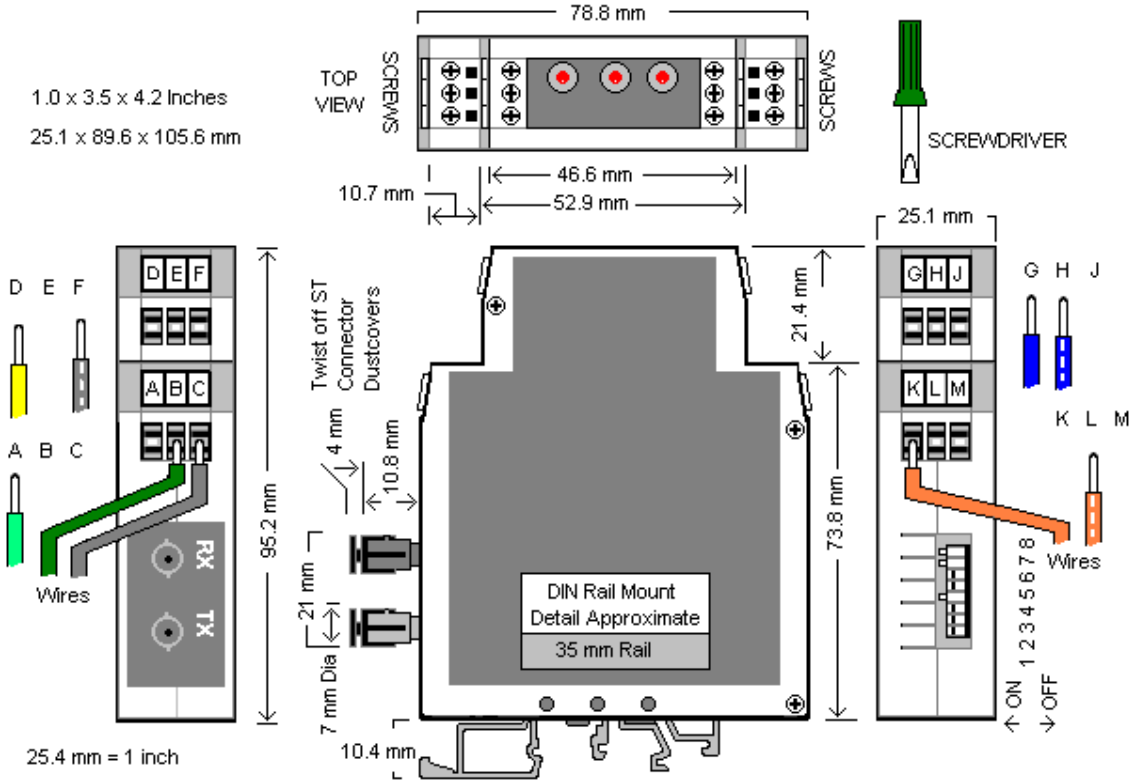
Mechanical Diagram